DETAIL

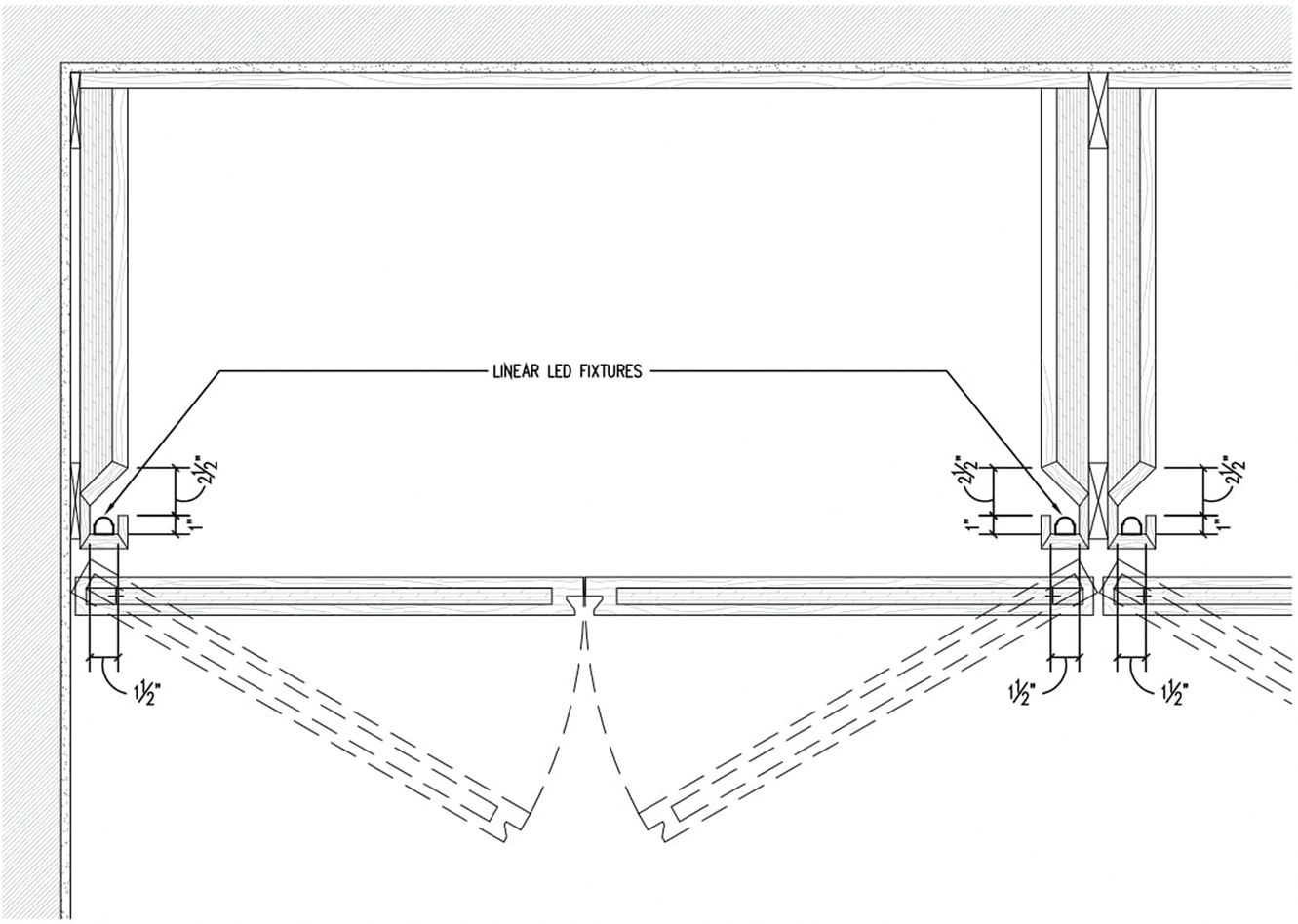

3D MODEL RENDERINGS

Closet Detail

Radiance LIGHTING

1" = 1'-0"